LOCUS MAP

NOT TO SCALE

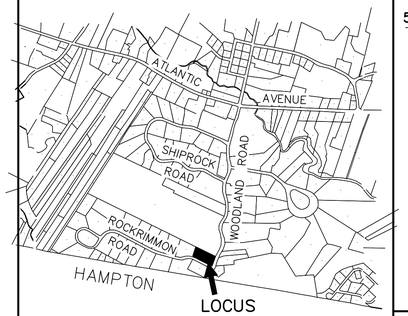

SOIL CLASS: 140 – CHATFIELD–HOLLIS–CANTON
447 – SCITUATE–NEWFIELDS
(SOURCE: USDA–SCS SOIL SURVEY)

BENCH MARKS: DATUM = ASSUMED

#1 SET HUB COR EXIS L.F. EL 56.25
#2 SET HUB EL 56.49
#3 SET NAIL BASE OAK EL 55.27 (TO BE REMOVED)

DESIGN INTENT:

1. THE BOTTOM OF THE EFFLUENT DISPOSAL SYSTEM SHALL BE CONSTRUCTED AT ELEVATION 55.0 WHICH IS NO MORE THAN 0.9' BELOW EXISTING GROUND AT THE HIGH CONTOUR THE DESIGNED EDS. (ELEV 55.9)

BB AT GRADE AT EL 55 (69% OF BED AREA AT OR BELOW EL 55)

SUITABLE REPLACEMENT AREA:

MUST BE DETERMINED BY RESUBMITTAL PER ENV–WQ 1003.10

LEGEND:

50 — EXISTING CONTOUR
(50) — PROPOSED CONTOUR
50.0 — EXISTING SPOT ELEVATION
(50.0) — PROPOSED SPOT ELEVATION

NOTES:

1. THIS PLAN IS NOT TO BE CONSTRUED AS A BOUNDARY SURVEY. PROPERTY LINES SHOWN ARE APPROXIMATED BASED ON INFORMATION FROM THE FOLLOWING SOURCE:
   RCRD PLAN C7883, RCRD 5645–2830
2. NHDES–WS&PCD SUBDIVISION APPROVAL NUMBER: 38775
   PREVIOUS CONSTRUCTION APPROVAL #90688
3. THIS SYSTEM IS NOT DESIGNED TO HANDLE GARBAGE DISPOSAL, JACUZZI BATH, OR SEWAGE EJECTOR PUMP WASTE. BACKWASH FROM WATER SOFTENER SYSTEMS SHOULD BE DISCHARGED TO A SEPARATE DRYWELL.
4. a) NO SURFACE WATER WITHIN 75'
   b) NO WELLS WITHIN 75'
   c) NO HYDRIC B SOILS WITHIN 75'
   d) NO HYDRIC A SOILS WITHIN 75'
   OF PROPOSED SYSTEM

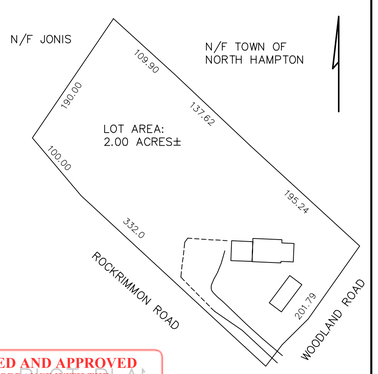

IF MORE THAN 18" COVER, LEACH FIELD MUST BE VENTED

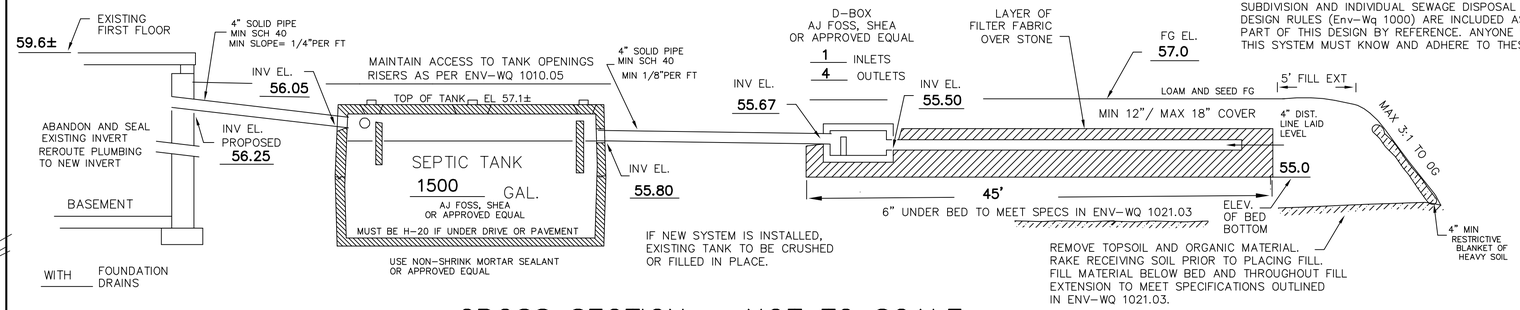

NOTE: INSTALLATION SPECIFICATIONS OUTLINED IN SUBDIVISION AND INDIVIDUAL SEWAGE DISPOSAL SYSTEM DESIGN RULES (Env–Wq 1000) ARE INCLUDED AS PART OF THIS DESIGN BY REFERENCE. ANYONE WHO INSTALLS THIS SYSTEM MUST KNOW AND ADHERE TO THESE RULES.

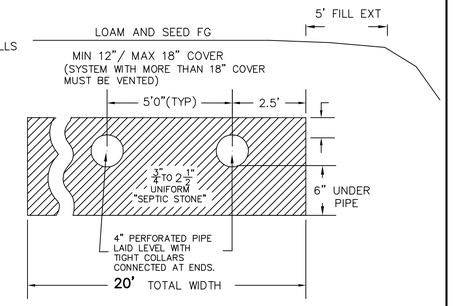

STONE TO MEET SPECIFICATIONS OUTLINED IN ENV WQ 1016.04

CROSS SECTION – NOT TO SCALE

PLAN : 1"=20'

5 DESIGNER MUST BE CONSULTED FOR ANY PROPOSED CHANGES OR ERRORS/DISCREPANCIES FOUND DURING SYSTEM INSTALLATION. (603 929–7404)
INSTALLER IS RESPONSIBLE FOR ANY TOWN PERMITS OR INSPECTIONS REQUIRED FOR THIS INSTALLATION.

6. PROPOSED ISDS IS DESIGNED TO SERVICE 1 STRUCTURES WITH DISHWASHER, WASHING MACHINE, TOILETS, AND TUB/SHOWERS. THERE IS NO KNOWN BURIAL SITE OR CEMETERY ON THE LOT OR THE ABUTTING LOT WITHIN 100' OF ANY COMPONENT OF THE ISDS OR WELL

7. THIS IS A "SHELF" PLAN PREPARED ONLY TO ALLOW FOR THE PROPOSED CHANGE IN BUILDING FOOTPRINT WITHOUT A PREVIOUSLY APPROVED DESIGN IN THE LAST 20 YEARS. EXISTING 4 BEDROOM LOADING WILL NOT CHANGE. (UNDER RULE 1014.15 REQUIREMENT)
PROPOSED SYSTEM IS ONLY INTENDED FOR INSTALLATION IN EVENT OF EXISTING SYSTEM FAILURE.

8. VERIFY UTILITY LOCATIONS PRIOR TO INSTALLATION OF NEW SYSTEM. WATER LINE MUST BE RELOCATED AS NEEDED TO MAINTAIN 25' FROM LEACH FIELD AND 10' FROM SEPTIC TANK OR SLEEVED AS SPECIFIED IN ENV–WQ 1008.04(e) WITHIN THOSE SETBACKS.

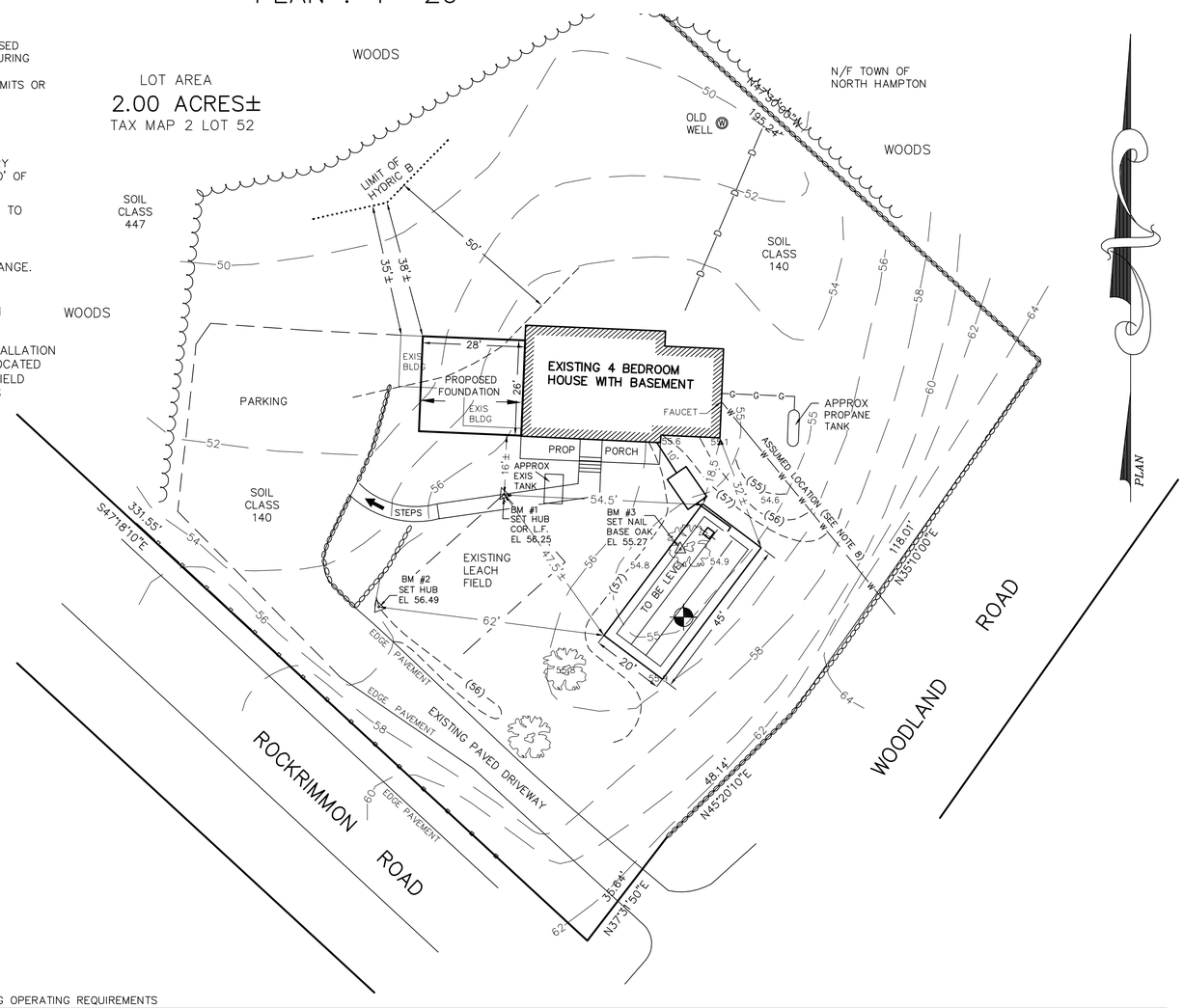

TEST PIT DATA

DATE: OCTOBER 21, 2015
TOWN INSPECTOR: MIKE CUOMO

TEST PIT #1 ELEV 54.9

0 –24 "	10YR3/2	STONY FINE SANDY LOAM, GRANULAR FRIABLE
12–48"	10YR5/6	STONY FINE SANDY LOAM, GRANULAR FRIABLE
48–64"	2.5Y5/4	STONY FINE SANDY LOAM, FRIABLE BLOCKY, WITH REDOX

ESHWT @ 48", ROOTS TO 4', NO OBS H2O, NO REFUSAL

PERC TEST DATA

DESIGN PERC RATE: 5 MIN/IN
DESIGN LOADING: 4 BEDROOMS EXISTING
AREA REQUIRED: 862 SF REQUIRED
AREA PROPOSED: 20' X 45' = 900 SF PROVIDED

APPROVED 16 November 2015
Town of North Hampton
Septic System Examiner
Notice: North Hampton requires a basal area (scarification) inspection.
Call CEO 24 hours in advance at 964-8650.
Michael Cuomo

SEPTIC SYSTEM PLAN

RULE ENV–WQ 1004.15 REPLACEMENT DESIGN FOR INSTALLATION ONLY IN EVENT OF EXIS SYSTEM FAILURE

LOCUS: 6 WOODLAND ROAD
NORTH HAMPTON, NH
TAX MAP 2 LOT 52

OWNER: MICHAEL & SARAH MEGNA
6 WOODLAND ROAD
NORTH HAMPTON, NH 03862

APPLICANT:
STOCKTON SERVICES
PO BOX 1306
HAMPTON, NH 03843–1306
603 929–7404

DATE: NOVEMBER 13, 2015

APPROVAL: _____

NEW HAMPSHIRE Designer of Subsurface Disposal Systems ★★★ Anne W. Bialobrzeski No. 348 Department of Environmental Services

735

SYSTEM OWNER IS RESPONSIBLE FOR THE FOLLOWING OPERATING REQUIREMENTS

ENV–WS 1023.01 (a) SEPTIC TANKS SHALL BE INSPECTED FOR ACCUMULATION OF SLUDGE AND SURFACE SCUM AT LEAST ONCE EVERY YEAR.
(b) WHEN THE COMBINED THICKNESS OF SLUDGE AND SURFACE SCUM EQUAL 1/3 OR MORE OF THE TANK DEPTH, THE TANK SHALL BE PUMPED BY A LICENSED SEPTIC TANK PUMPER.
ENV–WS 1023.02 TO PREVENT OBSTRUCTION OF THE DISTRIBUTION LINES AND LEACH FIELD, GREASE AND BULKY WASTE SHALL NOT BE FLUSHED OR OTHERWISE INTRODUCED INTO THE SEPTIC SYSTEM.
ENV–WS 1023.03 TOXIC AND HAZARDOUS MATERIALS SHALL NOT BE FLUSHED OR OTHERWISE INTRODUCED INTO THE SEPTIC SYSTEM.
ENV–WS 1023.04 TO PREVENT DAMAGE TO THE DISTRIBUTION LINES AND LEACH FIELD, VEHICLES, LIVESTOCK, AND OTHER HEAVY OBJECTS SHALL NOT BE ALLOWED ON THE LEACH FIELD.
ENV–WS 1023.05 IF WET AREAS APPEAR ON THE GROUND SURFACE ABOVE THE DISTRIBUTION LINES OR LEACH FIELD OR IF DISAGREEABLE ODORS OCCUR, THE SYSTEM SHALL BE INSPECTED FOR THE SOURCE OF THESE PROBLEMS, AND CORRECTIVE ACTION SHALL BE TAKEN.

REVIEWED AND APPROVED
IN ACCORDANCE WITH THE REQUIREMENTS OF THE NH DEPT OF ENVIRONMENTAL SERVICES
WATER DIVISION
Date: 11/20/2015
#:GA20151120013